The Orbital Debris Quarterly News

A publication of

The Orbital Debris Program Office
NASA Johnson Space Center
Houston, Texas 77058

April 1999 **Volume 4, Issue 2**

Project Reviews

Mir Orbital Debris Collector Data Analyzed

F. Horz

The Mir Environmental Effects Package (MEEP) was deployed on the Mir space station by STS-76 and retrieved by STS-86 after an 18-month exposure in orbit. The payload, managed by NASA Langley Research Center, included the Orbital Debris Collector (ODC) that was designed and built at JSC. The objective of ODC was to capture and return analyzable residues of the man-made and natural particulate environment in low-Earth orbit for a detailed assessment of its composition and potential origins. The JSC scientific team has recently published the results of their findings from ODC in *Optical Analysis of Impact Features in Aerogel from the Orbital Debris Collection Experiment on the MIR Station*.

ODC exposed highly porous, low-density (0.02 g/cm^3) SiO_2 aerogel as the basic collector medium. Based on laboratory impact simulations by a number of groups, this material is ideally suited to gently decelerate and capture hypervelocity particles, as demonstrated by unmolten remnants of silicate and aluminum particles fired at velocities as high as 7 km/s. This capability offers a significant improvement over traditional, comparatively dense collector media, including those employed on the Long Duration Exposure Facility (LDEF). The latter resulted in pervasive melting, if not complete vaporization of many impactors, leaving little or no residue for analysis. The expectation was that ODC would return a larger number and wider diversity of particles than all previous collection efforts in low-Earth orbit.

ODC exposed two identical trays, Tray 1 nominally pointing into the ram direction, Tray 2 in the opposite direction. The macroscopic survey of all impact features > 3 mm revealed that Tray 1 was dominated by low-velocity waste impacts, ~78%, in comparison to 25% on Tray 2. A high track abundance on Tray 2 was affected by discrete clusters of tracks, all of the same orientation (azimuth and inclination), suggesting that they may have resulted from a swarm of secondary projectiles from a local, primary impact.

Harvesting and compositional analysis of individual particles is tedious; therefore, significant effort went into the development of suitable techniques, minimizing the inadvertent loss of particles typically 10 microns or smaller. The compositional analyses, using a scanning electron microscope with energy dispersive spectrometers, concentrated on a survey-type inventory of diverse particle types and associated impact features.

Among the man-made particles detected were metallic aluminum, stainless steel, soldering compounds, and paint flakes. The swarm event was apparently due to some natural impactor, containing Fe, Mg, and Ca, which must have fragmented on impact with a neighboring structure on Mir.

In summary, the optical analysis of the Mir collectors has been completed, as has the survey-type assessment of man-made or natural classes of particles. Although ODC observations suggest that the utility of aerogel for the capture of hypervelocity particles may be velocity limited, its performance is vastly superior to traditional, non-porous media. Hundreds of impactor residues were returned by ODC. Future ODC efforts will concentrate on the compositional analysis of a statistically significant fraction of these particles and an improved assessment of their origins.

(Continued on page 2)

Inside...

Post-Flight Inspection STS-90 3
Error Bar Analysis 5
Debris Assessment Software (DAS) Version 1.0 6
UN COPUOS Meeting Summary 7

Project Reviews

Mir Orbital Debris Collector Data Analyzed, Continued

Paint Flake

1A06-17

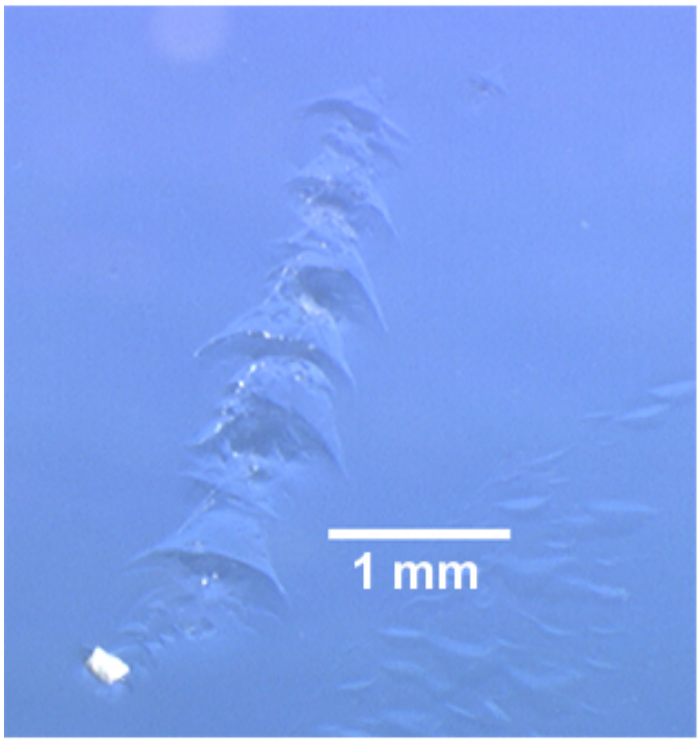

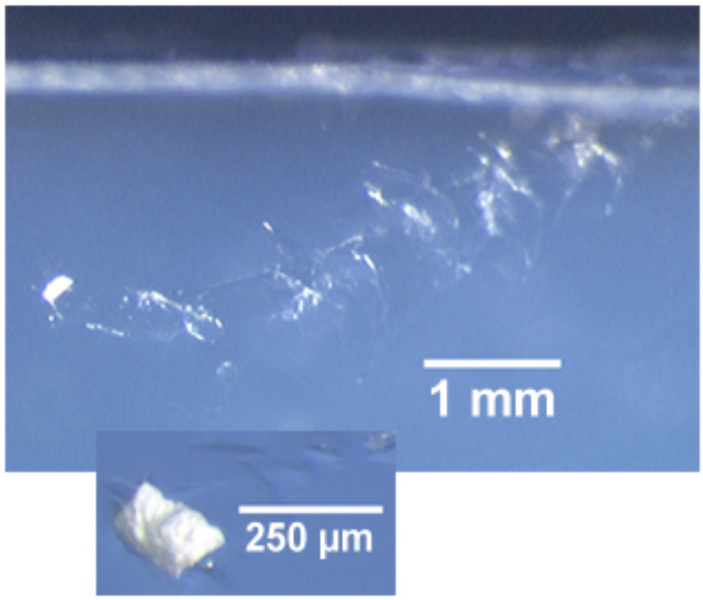

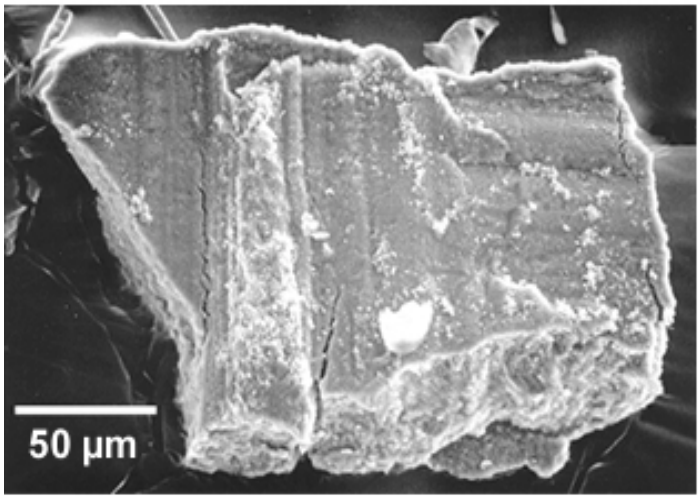

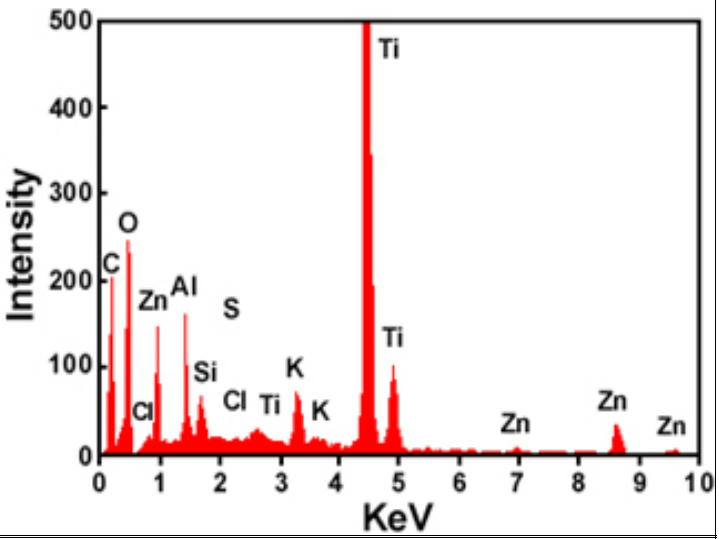

Detailed analysis of a man-made particle. Note the cone-in-cone structure and the misalignment of the last few cones with the overall track axis. The recovered particle exhibits a highly irregular, if not jagged and sharp-edged surface, suggesting that very little rounding, much less melting, occurred during the capture process. The dominance of Ti and Zn identifies this particle as paint (pigments), with with other elements being part of the organic binder.

Project Reviews

Orbital Debris Research History Document Updated

David S. F. Portree and Joseph P. Loftus, Jr., have revised and updated their 1993 report (*Orbital Debris and Near-Earth Environmental Management: A Chronology*, NASA Reference Publication 1320) on the development of orbital debris research at NASA and elsewhere in the world. The new report, *Orbital Debris: A Chronology* (NASA/TP-1999-208856, January 1999), includes minor revisions to the original document and extends the period of coverage to January 1998. Like its predecessor, the report provides an overview of the development, growing awareness, and management of orbital debris issues since 1961.

The report tracks orbital debris hazard creation, research, observation, experimentation, management, mitigation, protection, and policy. Included are significant debris generation events, Space Shuttle and space station orbital debris issues, ASAT tests, milestones in theory and modeling, detection system and shielding developments, and geosynchronous debris issues.

NASA's pioneering research in orbital debris is followed from the first serious assessment of debris collision hazard for a manned space flight (Gemini 8) to more comprehensive evaluations for Skylab, Space Shuttle, and the International Space Station. The NASA orbital debris research program is traced from its tentative beginnings in 1971 to its official establishment later in the decade. Major milestones in the development of NASA, U.S. Government, and international debris policies are identified. The evolution of international cooperation is detailed from initial bilateral discussions to the formation of the Inter-Agency Space Debris Coordination Committee and the recent deliberations in the United Nations' Committee on the Peaceful Uses of Outer Space.

The 158-page report also contains a list of all known satellite breakups and anomalous events through August 1998. v

Post-Flight Inspection of STS-90

J. Kerr

Personnel from JSC and KSC have completed their assessment of orbital debris and meteoroid damage to the Columbia Space Shuttle during the STS-90 mission in April 1998. The nearly 16-day mission was flown at an altitude near 280 km and in an inclination of 39 degrees. The inspection results, presented in *STS-90 Orbiter Meteoroid/Orbital Debris Impact Analysis* (JSC-28495, 22 March 1999), identify numerous impacts of orbital debrisand are as large as 2 mm.

Following standard procedures, inspectors examined Columbia's windows, radiators, payload bay door exteriors, and the reinforced carbon-carbon (RCC) of the leading edge of the wings. The fused-silica glass thermal panes of the eight principal windows, comprising a total surface area of 3.32 m^2, were examined both visually and with an optical micrometer and fiber optic light source. More than 3,000 impact sites were observed with 138 of these exceeding the 250-micron diameter threshold for more detailed reporting. Some, perhaps many of these impact features, may have been caused by particles other than orbital debris and meteoroids, e.g., from particles released during ascent.

Using samples collected by tape pull, dental mold, and wooden probe extraction techniques, a scanning electron microscope (SEM) equipped with energy dispersive X-ray spectrometers (EDXA) were able to identify the nature of 29 of the impactors. A total of 16 particles (55%) were found to be man-made debris, while the remaining 13 particles (45%) were meteoritic in nature. An analysis of the orbital debris impactors revealed an assortment of aluminum (56%), paint (31%), and stainless steel (13%) projectiles.

Overall, two windows were marked for replacement. Window 1 (the port side window) was replaced due to a single impact which left a 0.5 mm diameter crater. The impactor was assessed to have been an aluminum particle approximately 0.03 mm in diameter. A second window, the starboard middle window, was replaced due to the cumulative damage of numerous impacts.

Impact damage exceeding 1 mm in diameter is the principal focus of the radiator and RCC inspections. For the STS-90 mission only one such feature was discovered on the radiators, a nearly 1-mm hole in the face sheet on the port side. SEM/EDXA analysis determined that the impactor was possibly a 0.3 mm paint particle containing Zn, Ti, Fe, and Cl. A single impact feature on the port RCC was inflicted by a piece of orbital debris containing Pb, Sn, and Cu.

By far the largest orbital debris impact site seen was in the Flexible Reusable Surface Insulation (FRSI) applied to the exterior of the payload bay doors. A damage region 11.5 mm in length, 6.2 mm in width, and 5.5 mm deep was discovered on the starboard side. The impactor was an aluminum particle with an estimated diameter of 2.2 mm.

A general inspection of the Orbiter also revealed impact features on the vehicle's Ku-band antenna electronics box and on the outer surface of an Orbital Maneuvering System (OMS) engine nozzle. The Ku-band antenna is installed inside the payload bay and, hence, is vulnerable to impacts only on orbit. A 0.6-mm stainless steel particle impacted a structural member on the Ku-band antenna electronics box, leaving a crater approximately 2 mm in diameter and 2 mm deep. The impact feature on the Niobium OMS engine nozzle was very shallow but 1.6 mm across. No interior spall was detected, and neither the structural integrity nor the performance of the engine were compromised. The nature of the impactor could not be determined.

(Continued on page 4)

Visit the NASA Johnson Space Center Orbital Debris Website
http://sn-callisto.jsc.nasa.gov.

Project Reviews

Post-Flight Inspection of STS-90, Continued

(Continued from page 3)

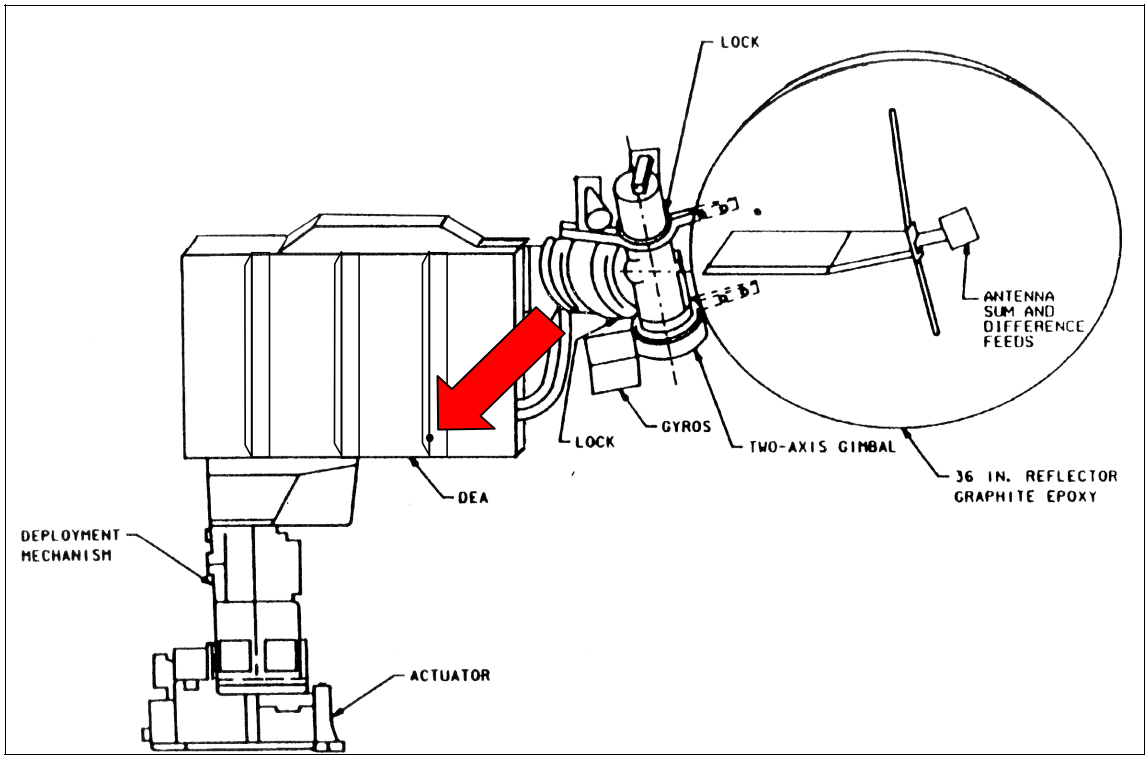

Location of the impact crater on the Ku-band antenna electronics box of OV-102.

Project Reviews

An Iterative Statistical Method for Estimating the Size Distribution of

T. Hebert, T. Settecerri, M. Matney

Radar represents a particularly reliable source of data regarding debris larger than 0.5 cm in LEO. Since 1990, debris data has been collected from the Haystack radar near Boston, Massachusetts during limited opportunities. The debris data is processed such that a very low probability-of-false-alarm is achieved. Objects passing through the beam are measured in range, range rate, and radar cross section (RCS). A unique size is then assigned to each object using a size estimation model (SEM) curve that provides a one-to-one mapping between RCS and size. The SEM curve in use today by NASA was determined empirically through experimental radar measurements of 39 known objects at various radar frequencies and at a variety of aspect angles. The SEM curve was obtained as an interpolated and extrapolated fit to the average RCS/(squared wavelength) value of each of the 39 objects. Use of the SEM curve to extract object size from object RCS offers a solution that incorporates a significant amount of experimental information and yet is nearly computation free.

By examining the experimental radar measurements from the 39 known objects, it is clear that an object's RCS can vary widely with shape, size, composition, wavelength, polarization, and aspect angle. When collecting debris data, the Haystack radar is operated in staring mode, so any object is within the beam only a fraction of a second. The aspect angle it presents to the beam varies little during its detection. More importantly, the particular aspect angle it presents to the beam is an occurrence of chance. Given large numbers of detected debris objects that have randomly presented an aspect angle to the radar beam, the use of the SEM curve to determine the distribution in size of that population is entirely supported. However, as we seek more precise information about debris populations within particular orbits, the numbers of objects we have measured in those orbits becomes additionally dominated by the random arrival of objects in the beam, namely Poisson statistics. The resulting size distribution curves generated with the SEM model exhibit fluctuations that are due both to the random aspect angle presented by each object to the radar beam and to the small number of objects measured by the radar. In an ideal situation, the remedy would be to collect many orders-of-magnitude more data. However, by seeking increased resolution in the solution, any data set would become insufficient. Therefore our goal is a more robust approach to forming estimates of debris size distribution given a limited data set.

A powerful approach with limited data sets is to supplement the data with qualitative prior information regarding the solution. In the problem of constructing the debris size distribution for a particular orbit family, our qualitative prior information is the assessment that much smoother size distributions would emerge were we able to operate the radar over a dramatically increased time frame. We have combined this prior information with a Poisson arrival model and a more complete probability model for RCS versus size, to form a more robust solution to estimating the size distribution of debris within each orbit family. To implement this solution, we have formulated an iterative maximum likelihood algorithm. This algorithm incorporates a set of one-to-many mappings from size to RCS that were originally determined from the experimental radar measurements of 39 known objects. These mappings are in the form of probability density functions that are combined with a Poisson arrival model to form a conditionl density function. The algorithm is initialized with a linear size distribution which is then refined within each iteration of the algorithm until a statically significant fit between the size distribution and the measured RCS values is achieved. Use of this criterion for stopping the iterative algorithm achieves a statistical trade-off between complete reliance on the accuracy of the size-to-RCS model and smoothness of the linear size distribution used to initialize the algorithm. Once a size distribution curve has been statistically accepted, the Poisson arrival model and size-to-RCS model can be used with that curve to compute its standard deviation. This is done via the Cramer Rao variance bound for an efficient estimator under the hypothesis that the qualitative prior information is correct, i.e. that this smoother size distribution is that which would have emerged given sufficiently long operation of the radar. The standard deviation is then assigned as the error bar. The result of one altitude bin is show below. The 'Un-Weighted' curve is the raw data converted directly from RCS to size. The 'weighted' curve effectively mitigates the endemic problem that a given RCS (in general) does not equate to a unique size. The 'weighted' size distribution computed represents a better estimate of the true size distribution of the objects detected by the radar. v

NEWS

Debris Assessment Software (DAS) Version 1.0

E. Cizek

Debris Assessment Software (DAS) Version 1.0 is now available on the Web or upon request. DAS provides the user with a set of tools to evaluate space programs with respect to NASA debris mitigation guidelines and to assess options a program might pursue to satisfy the guidelines. The software is structured to parallel NASA Safety Standard 1740.14, *Guidelines and Assessment Procedures to Limit Orbital Debris Generation.*

DAS has a new look but has retained all the analysis features of past releases. The most obvious change has been to the menu selection screens. They have been reorganized, with assessment of guidelines as a main menu option and the analysis of each guideline accessible through individual main menu options.

The *assessment of guidelines* option provides evaluation criteria for each guideline presented in the safety standard. The *analysis* options allow the user to assess debris mitigation strategies to bring a program into compliance for each guideline. General purpose utilities, user defined data files and software defaults, and user help messages that provide general topics related to the use of DAS are each available through a main menu option.

Download DAS Version 1.0 from the Web page http://sn-callisto.jsc.nasa.gov/mitigate/das/das.html or request a copy of "Debris Assessment Software Operator's Manual" and a DAS v1.0 diskette via email to marie.e.cizek1@jsc.nasa.gov. v

Abandoned Proton Ullage Motors Continue to Create Debris

For the fourth and fifth times in twelve months, ullage motors from Russian Proton fourth stages have broken-up in highly elliptical Earth orbits. The first component (1988-085G, U.S. Satellite Number 19537) was discarded during the deployment of three GLONASS navigation spacecraft, Cosmos 1970-1972, on 16 September 1988. The fragmentation created an estimated 17 or more pieces. The event occurred on 9 March 1999 while the object was in an orbit of 300 km by 18,950 km with an inclination of 64.6 degrees.

The second fragmentation occurred about three weeks later when one of the ullage motors from the Cosmos 2079-2081 mission (1990-045G, U. S. Satellite Number 20631) created as many as 76 debris. The orbit at the time of the event was 395 km by 19,080 km with an inclination of 64.8 degrees.

In both cases the debris were detected by the Naval Electronic Fence (formerly NAVSPASUR) and by the FPS-85 phased-array radar at Eglin AFB, FL. Comparisons of the debris orbital planes with that of the International Space Station revealed no near-term threat of collisions.

In all, 20 Proton ullage motors are known to have fragmented since the first event in September 1984. All but two of the events have been in highly elliptical transfer orbits, principally associated with geosynchronous and GLONASS missions. Only 4 of the 20 parent objects had decayed by January 1999, suggesting that much of the larger debris (as much as 100 detectable objects in some cases) may also still be in orbit.

The cause of the breakups is believed to be related to the residual hypergolic propellants in the motor unit when ejected from the Proton fourth stage. On each mission two ullage motors are released simultaneously, but to date only one of each pair has apparently exploded. Since Russian launch vehicle designers were informed of the breakup phenomenon in 1992, passivation countermeasures have been incorporated on at least some variants of the Proton fourth stage to prevent future occurrences. However, with approximately 70 unexploded Proton ullage motors still in orbit, additional breakups are highly probable.

During January 1999 an additional three pieces of debris were associated with the Nimbus 2 mission (1966-040) and were cataloged. The spacecraft is believed to have separated at least one object about 1 November 1997. The new catalogings bring to five the total number of debris believed to have originated from Nimbus 2, and all are in slightly elliptical orbits with parameters similar to those of Nimbus 2, i.e., 1095 km by 1175 km with an inclination of 100.4 degrees. The orbital characteristics of the latest debris indicate that the objects did not separate recently and may have been released at the time of the known event.

Finally, in March 1999 the U.S. Space Control Center cataloged a second piece of debris apparently associated with the July 1996 anomalous event of the Cosmos 1939 rocket body (1988-032B, U.S. Satellite Number 19046). The parent object is a Vostok final stage, of which six have released debris after being in orbit eight years or more. Unlike many anomalous debris, the two debris linked to the Cosmos 1939 rocket body are not decaying appreciably faster than the upper stage. v

Visit the NASA Johnson Space Center Orbital Debris Website
http://sn-callisto.jsc.nasa.gov.

NEWS

Workshop on Space Debris at UNISPACE III

The IAA is organizing a workshop on orbital debris to be held in conjunction with UNISPACE III. The objective is to inform interested parties about the current status of our knowledge and the extent of orbital debris issues, mitigation measures, the activities of professional societies and the Inter-Agency Space Debris Coordination Committee (IADC), and the discussions within the Scientific and Technical Subcommittee of the United Nations' Committee on the Peaceful Uses of Outer Space.

The preliminary program envisions five presentations: (1) the orbital debris environment by Joseph P. Loftus, Jr. (NASA); (2) mitigation issues, protection measures, and control of the future environment by Walter Flury (ESA); (3) currently applied mitigation measures, handbooks, and standards by Susumu Toda (NAL); (4) the background and activities of the IADC by Fernand Alby (CNES); and (5) activities of the IAA, IAF, COSPAR, and United Nations by Lubos Perek (Czech Republic). An hour and a half roundtable discussion, with a theme of "Future Directions of Space Debris Research" will follow the presentations.

For contact information see "Upcoming

Upcoming Meetings

26 July 1999: ***Workshop on Space Debris***, UNISPACE III technical forum, Vienna, organized by IAA. Contact Prof. Walter Flury, email: wflury@vmprofs.esoc.esa.de

4-8 October 1999: ***50th International Astronautical Congress***, Amsterdam, The Netherlands. Technical program includes 29 Symposia and 111 sessions which address the latest technological, economic, legal, management, political, and environmental issues of astrodynamics and space.

11-13 October 1999: ***17th Inter Agency Space Debris Coordination Committee Meeting***, Darmstadt, Germany.

10-13 January 2000: ***38th AIAA Aerospace Sciences Meeting and Exhibit***, Reno, Nevada, USA. **Deadline for abstracts is May 14, 1999.** The 38th AIAA Aerospace Sciences Meeting and Exhibit will again place emphasis on fundamental science issues. Participation by the basic research community is especially encouraged. The meeting will feature both invited and contributed presentations that address the future scientific and technical challenges facing the aerospace community. All Orbital Debris papers should be submitted to Atmospheric Environment Technical Committee via:

Steven D. Pearson
Manager, Electromagnetics & Aerospace Environments Branch
NASA MSFC
Code EL23
Marshall Space Flight Center, AL 35812
256/544-2350 - 256/544-8807 fax
E-mail: steve.pearson@msfc.nasa.gov

Meeting Report

United Nations Adopts Orbital Debris Report

Orbital debris was included on the agenda of the Scientific and Technical Subcommittee of the Committee on the Peaceful Uses of Outer Space in February 1994, in accordance with General Assembly resolution 48/39 of 10 December 1993. The Subcommittee considered orbital debris an important issue and agreed that "international cooperation was needed to evolve appropriate and affordable strategies to minimize the potential impact of space debris on future space missions." The five-year assessment of the world state of knowledge about orbital debris was concluded on 24 February 1999 with the adoption by the Subcommittee of a technical report on orbital debris.

This unprecedented international effort focused "on understanding aspects of research related to space debris, including: debris measurement techniques; mathematical modeling of the debris environment; characterizing the space debris environment; and measures to mitigate the risks of space debris." At the annual meetings of the Subcommittee during 1996-1998, member states gathered to learn of the research, which had been conducted and was planned on the three major topics of measurements, modeling, and mitigation. During each session, an ad hoc group of orbital debris specialists convened to draft a summary of that year's conclusions.

In 1996 the Subcommittee heard of the effects to measure the orbital debris environment and to understand the data and effects of this environment on space systems. Terrestrial and space-based sensors, using radar, optical, and near-optical instruments, were described. The examinations of returned spacecraft surfaces and experiments, especially those of the U.S. Space Shuttle, the Hubble Space Telescope, the Solar Maximum Mission spacecraft, the Long Duration Exposure Facility, the Mir space station, the European Retrievable Carrier, and the Japanese Space Flyer Unit, were also noted.

Modeling of the orbital debris environment and the related task of performing risk assessments were the subjects of the Subcommittee's meeting in 1997. Orbital debris models were defined as mathematical descriptions of the current and future distribution in space of debris as a function of its size and other physical

(Continued on page 9)

Abstracts From Papers

Preliminary Results from the NASA Orbital Debris Observatory
Presented at the 9th AAS/AIAA Space Flight Mechanics Meeting, February 7-10, 1999

J. Africano, J. Lambert, E. Stansbery

The NASA Johnson Space Center (JSC) is conducting both radar and optical observations to characterize the orbital debris environment. The combination of sensors allows the biases inherent to each to be more accurately interpreted. NASA JSC operates two optical telescopes at a facility near Cloudcroft, NM, the Liquid Mirror Telescope (LMT) and the CCD Debris Telescope (CDT).

To gain a better understanding of the LEO and MEO (low and middle earth orbit) optical orbital debris environments, NASA JSC uses the LMT. The mirror of the LMT consists of a three-meter diameter parabolic dish containing several gallons of mercury that is spun at a rate of ten revolutions per minute. Centrifugal force and surface tension cause the mercury to spread out in a thin layer over the dish creating a parabolic reflective surface accurate to within a fraction of the wavelength of light. The LMT was built for about one tenth the cost of traditional telescopes of similar size. A disadvantage of the LMT is its inability to point in any direction other than the zenith. However, this is not a major limitation since the telescope is used to statistical sample the orbital debris population by observing the orbital debris that pass through the field of view. The toxicity of the mercury is also a significant safety issue.

The use of standard astronomical long-exposure charge-coupled device (CCD) camera for observations of LEO orbital debris is impractical because the velocity of these objects quickly carries them through the field of view. To achieve the needed sensitivity with short exposure time, an intensified video camera was installed. The sensitivity of the intensified video camera on the LMT has been demonstrated to better than 17.5 stellar magnitudes corresponding to a ten percent reflective, six centimeter sphere at one thousand kilometers altitude. Optical LEO orbital debris observations are limited to within about 4 hours of sunset and sunrise, while the sky is dark and the debris objects are illuminated by the sun.

While the LMT is used for the characterization of the LEO and MEO orbital debris environments, its inability to point off zenith limits its utility for the GEO environment where objects are concentrated over the equator. To gain a better understanding of the GEO debris environment, NASA JSC uses the CCD Debris Telescope (CDT). The CDT is a 12.5-inch aperture Schmidt transportable telescope with automated pointing capability that has been used in several orbital debris measurement campaigns. The CDT is presently co-located with the LMT. With its current sensor (24-mm, 512 X 512 pixel CCD), the CDT can see down to 17.1 magnitude in a 30 second exposure with a 1.5 degree field of view. This corresponds to a ten percent reflective, 0.8-meter diameter object at geosynchronous altitude. The telescope is presently supporting an international campaign for detection of near-geosynchronous orbital debris being conducted under the auspices of the Inter-Agency Space Debris Coordination Committee (IADC).

Preliminary results from both the LMT and the CDT are presented. v

Comparison of Optical and Radar Orbital Debris Measurements
Presented at the 9th AAS/AIAA Space Flight Mechanics Meeting, February 7-10, 1999

T. Settecerri, J. Africano, E. Stansbery

The NASA Liquid Mirror Telescope (LMT) Project has been collecting data on the LEO debris environment since April 1996. From Apr. '96 through Apr. '97, 72 hours of data were collected using an analog recording system. These videotapes have been screened for all moving objects. Priliminary results indicate that 190 uncorrelated targets (UCTs) and 61 catalogued objects were detected. NASA has processed 4700 hours of Haystack data since 1990 and nearly 2500 hours from HAX since 1994. These data sets have identified previously unknown debris families based on inclination, altitude, and polarization. The newly analyzed LMT data complements the radar data quite well. It also will be used to look for possible differences between the optical and radar measurements.

The size limit of detections for the LMT is estimated from a correlation factor derived by Dr. Karl Henize, which calculates the ratio of total detections to the predicted number of cataloged detections. This ratio, when compared to the size distribution measured by Haystack indicates that the LMT is seeing objects about 3 cm diameter or larger. It is expected with future software and hardware upgrades that the minimum size may decrease to about 1 cm.

Although the results are preliminary, and all biases have not yet been removed, comparisons of altitude, inclination, and size distributions for radar and optical orbital debris measurements are made. v

A Comparison of Radar and Optical Techniques for Conducting Near Earth Object (NEO) Searches
Presented at the 9th AAS/AIAA Space Flight Mechanics Meeting, February 7-10, 1999

E. Stansbery, J. Lambert, J. Africano

NASA has successfully used both radars and optical telescopes to statistically sample the man-made orbital debris population to small sizes. For low earth orbiting (LEO) debris detection, radars out perform optical telescopes because they are not as affected by weather conditions, can operate 24 hours per day, and can detect objects at least 10 times smaller than optical telescopes. Because of their better performance for orbital debris, it has been thought by some that perhaps innovative techniques could allow radars to match or exceed the performance of optical telescopes for NEO searches. Past work has already demonstrated that radar is a valuable tool in NEO research in areas of orbit determination, size, shape, and surface characterization. This paper will show that another 5-10 dB in *S/N* would be required above what is now available in the world's most sensitive radars to achieve reasonable detection rates. In the opinion of the authors, radar is of very marginal use for NEO search and discovery programs. v

INTERNATIONAL SPACE MISSIONS

January - March 1999

International Designator	Payloads	Country/ Organization	Perigee (KM)	Apogee (KM)	Inclination (DEG)	Earth Orbital Rocket Bodies	Other Cataloged Debris
1999-001A	MARS POLAR LANDER	USA	Heliocentric Orbit			1	0
1999-002A	ROCSAT 1	ROC	583	609	35.0	1	0
1999-003A	STARDUST	USA	Heliocentric Orbit			1	0
1999-004A	GLOBALSTAR M36	USA	1411	1415	52.0	1	0
1999-004B	GLOBALSTAR M40	USA	1413	1415	52.0		
1999-004C	GLOBALSTAR M23	USA	1412	1415	52..0		
1999-004D	GLOBALSTAR M38	USA	1412	1415	52.0		
1999-005A	TELSTAR 6	USA	35775	35799	0.0	2	1
1999-006A	JCSAT 06	JAPAN	35763	35812	0.0	1	0
1999-007A	SOYUZ TM-29	RUSSIA	340	356	51.7	1	0
1999-008A	ARGOS	USA	826	845	98.7	1	0
1999-008B	ORSTED	DENMARK	646	866	96.5		
1999-008C	SUNSAT	S. AFRICA	646	865	96.5		
1999-009A	ARABSAT 3A	ARABSAT	35727	35742	0.1	1	1
1999-009B	SKYNET 4E	UK	Enroute to GEO				
1999-010A	RADUGA 1-4	RUSSIA	35757	35813	1.4	2	1
1999-011A	WIRE	USA	539	593	97.5	1	1
1999-012A	GLOBALSTAR M22	USA	1412	1415	52.0	2	0
1999-012B	GLOBALSTAR M41	USA	1412	1415	52.0		
1999-012C	GLOBALSTAR M46	USA	1411	1416	52.0		
1999-012D	GLOBALSTAR M37	USA	1413	1414	52.0		
1999-013A	ASIASAT 3S	ASIASAT	35774	35989	0.1	2	1

ORBITAL BOX SCORE

(as of 31 March 1999, as catalogued by US SPACE COMMAND)

Country/ Organization	Payloads	Rocket Bodies & Debris	Total
CHINA	24	100	124
CIS	1336	2565	3901
ESA	24	214	238
INDIA	25	4	29
JAPAN	65	49	114
US	838	3103	3941
OTHER	265	26	291
TOTAL	2564	6110	8674

N NOTICE N

This is the last issue to be sent out in hard copy form.

Please email the address below when you have successfully found the newsletter on our website.

Meeting Report

(Continued from page 7)

parameters. Of particular interest were analyses of fragmentation models, short- and long-term evolution of the orbital debris population, and a comparison of models employed throughout the aerospace community.

The third and final topic on the Subcommittee's agenda, orbital debris mitigation measures, was addressed in 1998. Mitigation comprises the reduction of the orbital debris population growth and protection against particulate impact. Whereas several effective techniques for reducing the growth of orbital debris have been or are planned to be introduced, methods for remediating the current orbital debris environment were viewed as not practical with present technology. Protection against orbital debris includes not only innovative shield designs for withstanding impacts by smaller particles but also collision avoidance procedures from larger objects.

In addition to the contributions of the standing members of the Subcommittee, the assistance of the Inter-Agency Space Debris Coordination Committee (IADC) was cited as especially valuable. The 10-member group of the world's leading space agencies represents the expertise of nearly 100 orbital debris specialists. The IADC was particularly helpful by reviewing the draft technical document and by providing graphical and numerical data for the report.

The report is expected to be released prior to the UNISPACE III

Correspondence concerning the ODQN can be sent to:
Sara A. Robertson
Managing Editor
NASA Johnson Space Center
The Orbital Debris Program Office
SN3